Processing Software EC 200 for WINDOWS™

Application
Processing software for static wheel load scales WL103 and dynamic weighing sensors WL 110, for measuring wheel loads and calculating axle loads, subtotals as well as total weights of vehicles and aeroplanes.

Input
1...12 static wheel load scales or 2 dynamic weigh sensors.

Zeroing
Automatic zero check after starting the measuring procedure.

Measurement
Manual or automatic operation, static or dynamic weighing.

Calculation of Overweights
Editable limits for a unlimited number of vehicle types.

Tare and Net Weight
The net weight is calculated using the tare weight input or a selectable previously measured weight.

Storing and printout
Upon key stroke the weighing results are stored and printed out.

Storage Format
Binary. Format conversion for further processing with common spread sheet programs.

Printout Format
Various formats, selection in the setup.
20 editable text lines, free positioning.
10 additional text lines for comment to the individual measurements.

Long Distance Display
The weighing results may be monitored on the optional remote display.

Alert Device and Traffic Light
Two relais of the optional switch box may be activated. One is swiched in the case of overweight, the second after the weighing is completed in order to separate the queued vehicles.

Data In- and Output
COM 1...8
DDE data exchange ability with other Windows applications.

Power Supply
WL 103 by their own batteries.
WL 110 sensors and Interface box via mouse or keyboard port.

Accessories
Refer to W9.100

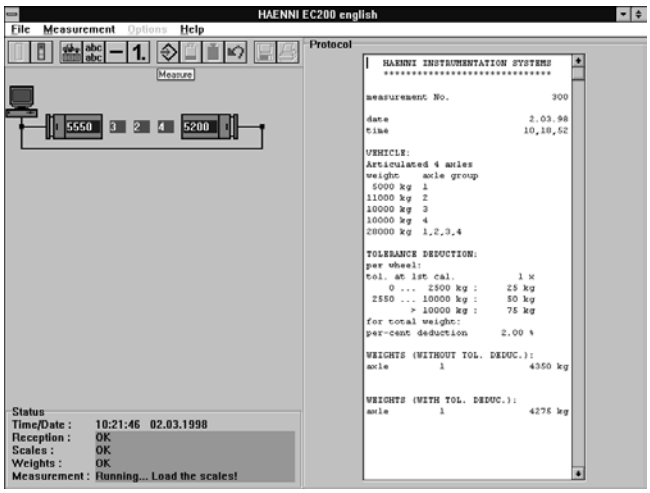

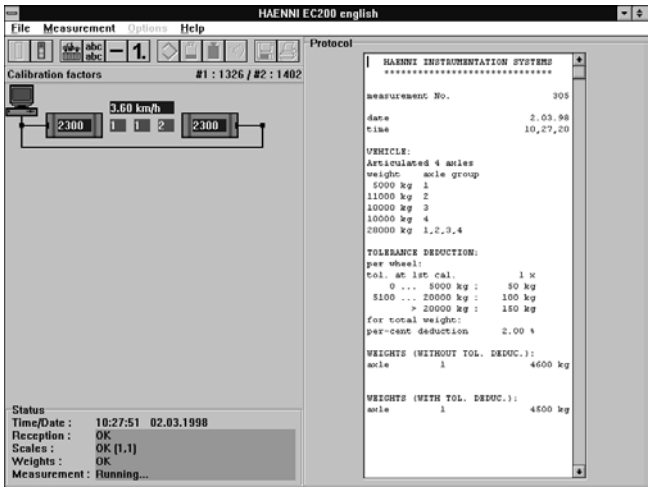

Scope of Supply
1 CD ROM.The manual is integrated in the on-line help and may be printed out. The installation instruction is in the CD ROM booklet

System requirements
Pentium 133 MHz or better recommended

Selection Chart

Ordering Example:		EC 200 /	8	9	9	.	3	9	1	/	00Y
Operating system	WINDOWS 32 bit		9	9	9						
Language	selectable						3	9	1		
Measuring range	Automatic selection										**00Y**

Design and Function

EC 200 is a WINDOWS™ software for the processing of weights of vehicles measured with static or dynamic wheel load scales. The scales are connected to the computer by means of specially designed cables and connecting boxes. For the communication with the scales one of the serial ports COM 1 to COM 8 is used. Depending on the used type of computer the power supply is from mains or from the integrated batteries (laptop). The static scales WL 103 are running on their own batteries, while the dynamic sensors WL 110 and the interface box are fed from the mouse or the keyboard port. The Results are stored and printed manually or automatically. The EC 200 software is able to drive remote displays, over weight alarm devices and traffic lights for guiding the vehilcles. The operation of the software is self explaining. In addition it is equipped with an on-line help and with clearly understandable comments and error messages.

Processing Software EC 200 for WINDOWS™

Features

Application	Processing software for wheel load scales, for measuring wheel loads and calculating axle loads, subtotals as well as total weights of vehicles and aeroplanes.
User interface	WINDOWS™, keyboard and mouse.
Languages	English, German , French, Spanish, Estonian, Czech, Netherlands, Polish, Hungarian, prepared for additional languages .
Data in- and output	RS 232 C communication. 1...12 Wheel load scales WL 103 or 2 WL 110-sensors. Selection of the COM port in the setup.
Measuring modes	WL 103: weighing of a vehicle in one operation with the same number of scales as wheels, consecutive (partial) measurement with any number of scales, unloaded scales are ignored. Single side measurement. Semi-automatic weighing in conjunction with a remote long distance display and a traffic light driven by the EC 200 software. WL 110: Consecutive measurement with 2 sensors. Automatic weighing using a EC 200 driven traffic light.
Zeroing	WL 103: Automatic zero check and setting after starting the measuring procedure, zero tracking. WL 110: Automatic zero tracking.
Measurement	WL 103: Manual or automatic operation when the scale is loaded and the indication is stable. Measures to avoid incorrect weighing: Check for stability, protection against double weighing of an axle, undo and repeat of a measurement if selected in the setup. WL 110: Start and stop by key stroke, or automatic start with stop after a time-out, which can be altered in the setup. Automatic measurement of the axles.
Tare and net weight	The net weight is calculated using the tare weight input or a previous measurement.
Vehicle data	Editable limit sets for any number of vehicle types. A set contains the limits for axles, axle groups and total weight, as well as the position of subtotals. Selection of the vehicle type prior or after the measurement, or, if selected in the setup, automatic reduction of the selection according to the weighed number of axles.
Tolerance deduction	Deduction of the single or multiple scale tolerance (at first calibration) according to its division, and/or percent and fixed deduction. Editable in the setup.
Text lines	Up to 20 editable text lines which can be placed anywhere in the printout. These lines are printed with every protocol. A additional text block with maximum 10 lines is available. These lines may be complemented or overwritten for each measurement.
Storing	Automatic storing if the corresponding option is set. Due to the binary format the result file it is secured against counterfeit. Altering with a text editor is not possible without damaging the file. The file may be converted to any spread sheet program format for further processing using the integrated conversion function.
File name	The file name is JJMMDD[Counter].MSG.
File size	The maximum file size can be limited (360KB/1.2MB/1,44MB). The counter will be incremented if the selected size is reached.
Printout	Various formats may be selected in the setup. One of the default formats is intended for ticket printer. Individual formats may be produced. Previously stored results may be printed out at any time.
Menus	File, Measurement, Options, Help.
Approval	All relevant parameters may be protected by password.
Manual	An on-line help is integrated in the program.

Processing Software EC 200 for WINDOWS™

Example of the printout

```
    HAENNI Wheel Load Scales INC                    1)
    ****************************                    1)

measurement No.                   284               2)

date                         23.02.98               3)
time                         11,03,55               3)

VEHICLE:                                            4)
Articulated, 4 axles
weight    axle group
 5000 kg  1
11000 kg  2
10000 kg  3
10000 kg  4
28000 kg  1,2,3,4

TOLERANCE DEDUCTION:                                5)
per wheel:
tol. at 1st cal.            1 x
    0 ...  2500 kg :      25 kg
 2550 ... 10000 kg :      50 kg
        > 10000 kg :      75 kg
for total weight:
percent deduction:       2.00 %

WEIGHTS (WITHOUT TOL. DEDUC.):                      6)
axle         1               4350 kg
axle         2              10750 kg
axle         3              10950 kg
axle         4              11850 kg

total weight                37900 kg

WEIGHTS (WITH TOL. DEDUC.):                         7)
axle         1               4300 kg
axle         2              10650 kg
axle         3              10850 kg
axle         4              11750 kg

total weight                36799 kg

OVERWEIGHTS:                                        8)
axle(s)      3                850 kg
axle(s)      4               1750 kg
axle(s)      1,2,3,4         8799 kg
```

```
WEIGHTS (WITHOUT TOL. DEDUC.):                      6)
axle         1               4350 kg
axle         2              10750 kg
axle         3              10950 kg
axle         4              11850 kg

total weight                37900 kg

DEDUCTIONS:                                         9)
3*CONTAINER 20.0 kg            60 kg

total weight
with deductions             37840 kg
```

```
WEIGHTS (WITHOUT TOL. DEDUC.):                      6)
axle         1               4350 kg
axle         2              10750 kg
axle         3              10950 kg
axle         4              11850 kg

total weight                37900 kg

NET WEIGHT:                                         10)
first measurement           12500 kg
23 / 20.01.98 / 10,32,12
BE 123456
current measurement         37900 kg
net weight                  25400 kg
```

1) The title is part of 20 editable text lines.
2) Consecutive number of the measurement. To be activated in the setup.
3) Date and time of the internal clock of the PC.
4) Programmable set of limits. The vehicle's name is editable text. The limit sets are used to determine overweights.
5) Tolerance deduction. To be activated in the setup. The title is editable. Only the selected types of deduction (single or multiple tolerance at first calibration, %-deduction, fixed deduction) appear in the protocol.
6) Weights without tolerance deduction. The title is editable. Wheel and/or axle weights are printed according to the setup. The total weight is always printed out.
7) Is printed out only if the tolerance deduction is activated. The title is editable.
8) Overweights are calculated on the base of the chosen set of limits. The title is editable.
9) Deductions appear after the total weight has been printed out.
10) The net weight is the difference between the current and a previous measurement. The total weight of the previous measurement may be saved in a list and recalled again for further net weight calculations. A code word is used as a reference, e.g. the licence plate number.

Processing Software EC 200 for WINDOWS™

Examples of applications

1. With two scales only, a vehicle is measured axle by axle.
   Left: Weighing with WL 103 (static)
   Right: weighing with WL 110 sensor (dynamic).
   One PC for each measuring system or one for both with two simultaneously running EC 200.

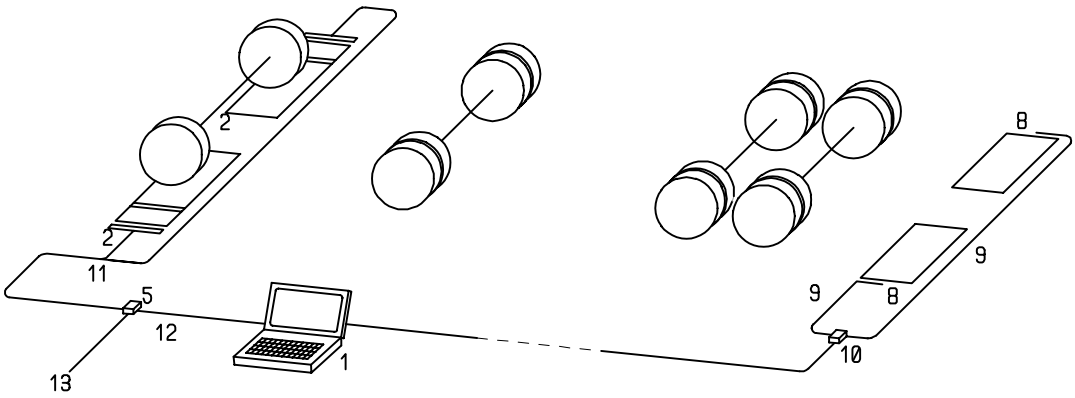

2. With more than one pair of scales axle groups can be measured in one operation.

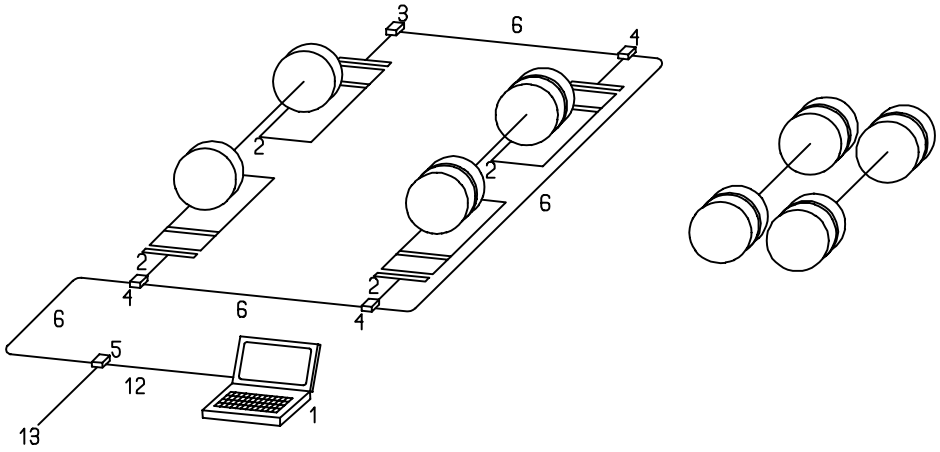

3. With more than one pair of scales a vehicle can be measured in one operation. The Number of axles to be measured at the same time is limited to 6.

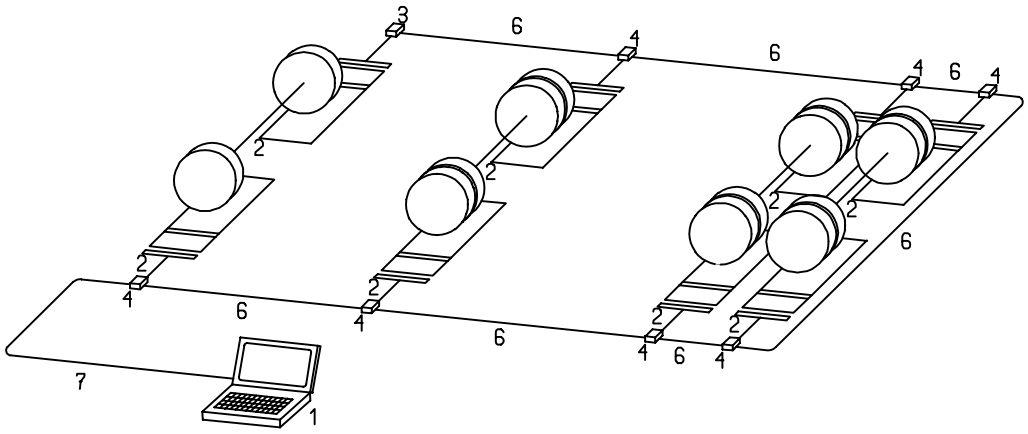

1: Personal Computer with EC 200
2. Wheel load scale WL 103 (static)
3: Connecting box type 0
4: Connecting box type 1
5: Connecting box type 2 for 12V external supply
6: Connecting cable 5m or 10m
7: Connecting cable RS 232 5m for PC
8: Wheel load scale WL 110 (dynamic)
9: Connecting cable 5m or 10m
10: Interface box
11: Y-connecting cable for 2 scales WL 103
12: Adapter cable RS 232 2m or 5m
13: Mains adapter or 12V supply cable.

Notes:
- Instead of the connecting cable (7) a connecting cable (6) and a adapter cable (12) may be used as well in case that 5m is not long enough, or for higher robustness.
- Application 1: Instead of the Y-connecting cable (11) it is also possible to use a connecting box type 0 (3) and type 1 (4) and two connecting cables (6).